DATA SHEET

K 470 Plus Transport Crate - 40506

The K 470 Plus is an innovative packaging concept: a two-part transportation system consisting of upper part and lower part. Different height sections can be combined together for greater flexibility.

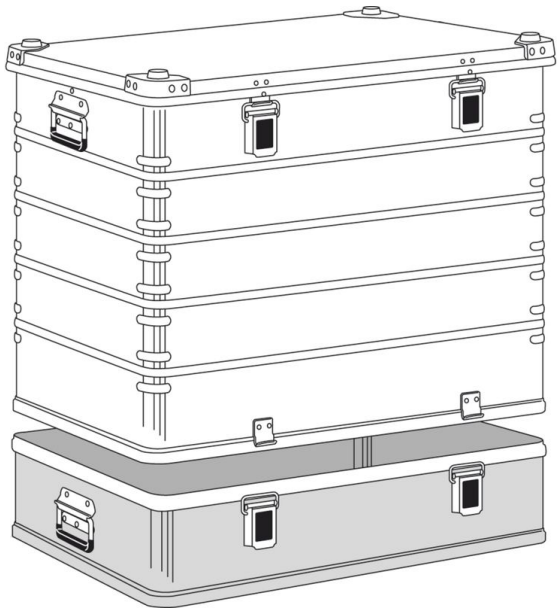













PRODUCT DESCRIPTION

- A two-part transportation system consisting of a top and bottom section.
- The bottom part is available in two base dimensions and can be flexibly combined with top sections of different heights.
- Easy and ergonomic access to the contents via the lid or by removing the top part. This allows the contents to be easily lifted out and devices to be operated whilst they are inside the container.
- Compatible with the K 470 series.
- Customised versions available on request.
- The detachable upper section and lid are equipped with a peripheral seal.
- Lid with stainless steel hinges.
- "2 standard base dimensions (550 × 350 mm and 750 × 550 mm) are available
- Depending on the size, all-round beading and corner beads are added for extra dimensional stability.
- Stackable aluminium universal container.
- Stacking corners made of cast aluminium ensure secure stacking.
- Fully welded joints between profile sections.
- Snap fasteners: can be secured with a plug lock, lead seals, spring anti-opening feature or a padlock (max. shackle thickness 6 mm).
- Clearance dimensions approx. 30 mm less than inside dimensions (length and width). Special sizes on request.
- ZARGES Comfort Handles for ergonomic handling.

- ZARGES Comfort fastener for ergonomic use and an extremely long service life.

HINTS AND SPECIAL FEATURES

Top section.
Can only be used together with the bottom section.

PRODUCT FEATURES

Property	Value
Colour of the stacking corners	Natural aluminium
Corner beading	Yes
Description	Upper section: Total height 730 or 800 mm
Fasteners	Comfort fasteners
Handles	Sprung drop handles
Integrated wheels	No
Internal dimensions L x W x H	750 mm × 550 mm × 590 mm
Material	aluminium
Material of the stacking corners	aluminium
Outside dimensions max. L x W x H	800 mm × 600 mm × 610 mm
Peripheral beading	Yes
Seal	foamed lid seal
Stacking corners	Yes
Volume	240 l
Weight	10.5 kg

ACCESSORIES AND SPARE PARTS

ACCESSORIES 6



Attaché insert
SKU 40626



Lock Set
SKU 40832



Lock Set
SKU 40833

Shackle lock
SKU 46989



Tool bag
SKU 40627



TSA shackle lock
SKU 46789

ZARGES (U.K.) LTD.
Blackwater Trading Estate,
The Causeway
CM9 4LJ Maldon, Essex

Tel: 01908 641118
sales@zarges.co.uk

www.zarges.com/uk
Effective 26/11/2026
Subject to change or error.